因时机器人
INSPIRE-ROBOTS

G2

RH5DG2 Series

A More Powerful
High DOF Dexterous Hand

Compact

13 DOF
18 Joints
990g Weight

Powerful

20N
Fingertip Strength

8kg
Passive Finger Payload

Intelligent

30+
Built-in Moves

8 Sets
High Sensitive Tactile Sensor

Multi-Mode Control

Force + Position + Temperature
Multi-Modal Sensing Technologies

400-666-5160
info@inspire-robots.com
www.inspire-robots.com

INSPIRE ROBOTS | Beijing
4F, Building 5, Shougang Park West Ten Winter Olympics Square, Shijingshan District, Beijing

INSPIRE ROBOTS | Shenzhen
Room 5B06, Building 5, Phase 1, Shenzhen Software Park, Nanshan District, Shenzhen

Model	RH5DG2-E4	RH5DG2-E2
Control interface	EtherCAT+CAN FD	EtherCAT+RS485
Degrees of freedom	13	13
Numbers of joints	18	18
Weight	990±10g	990±10g
Operating voltage	14V~48V	14V~48V
Quiescent current	290±20mA（24V）	290±20mA（24V）
Peak current	7.5A @24V	7.5A @24V
Repeatability	±0.2mm	±0.2mm
Fingertip Strength	≥20N	≥20N
Thumb Fingertip Strength	≥10N	≥10N
Force resolution	0.1N	0.1N
Lateral rotation range of thumb	60°~170°	60°~170°
Index/Middle finger lateral swing	±15°	±15°
Maximum pressure on fingertip	8kg	8kg
Range of tactile sensor	30N	30N
Tactile sensor accuracy	5%FS	5%FS
Number of tactile sensors	8	8
Hand closing time	≤0.8s	≤0.8s
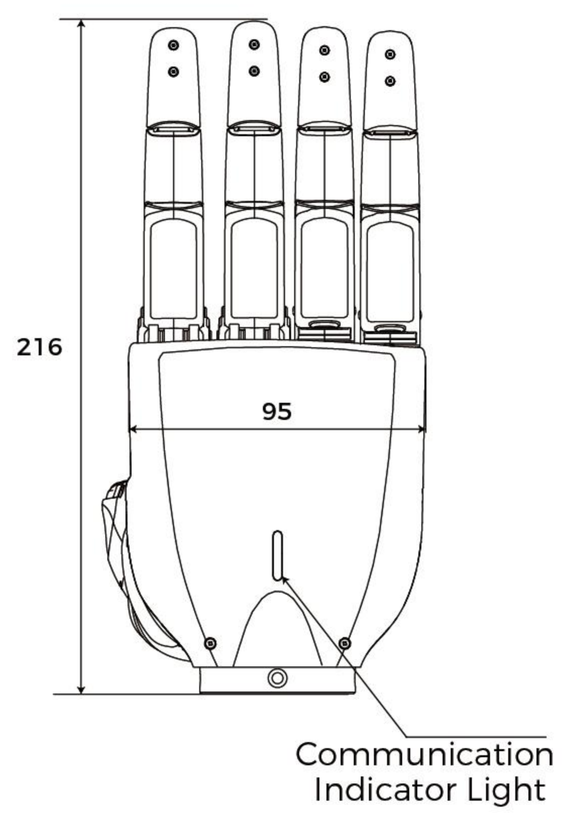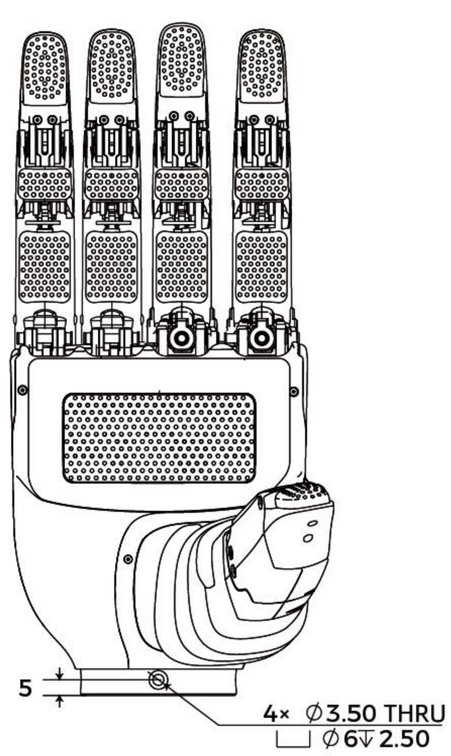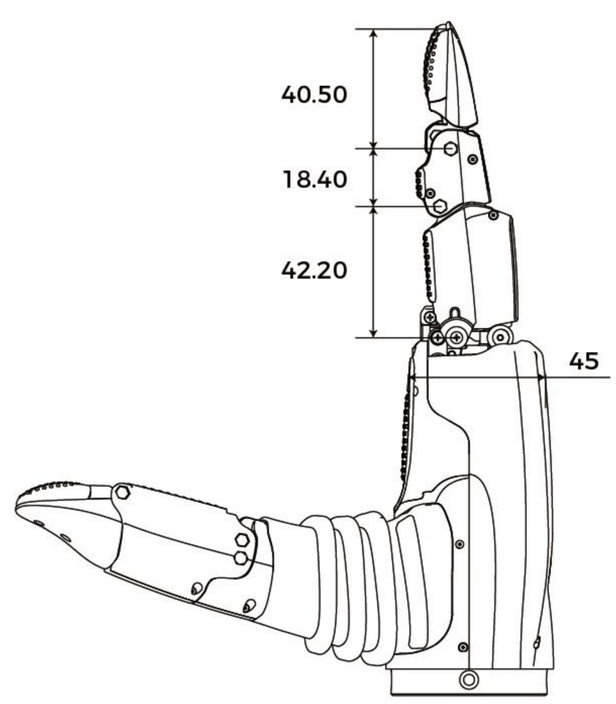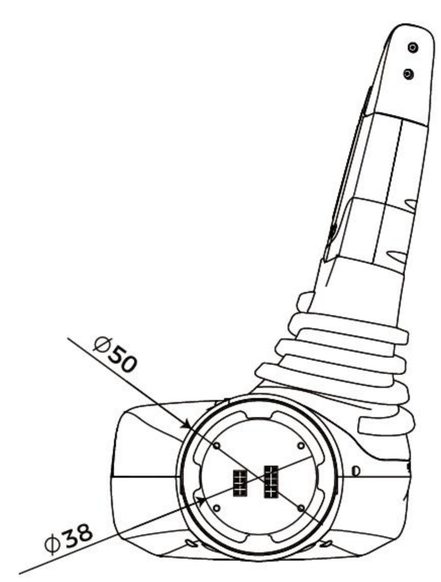
Dimensions